For information, please contact:
Pacific Geomatics Limited
sales@pacgeo.com | +1 604-372-3300

WorldView-1

WorldView-1, launched September 2007, is the first of our next-generation satellites—the most agile satellites ever flown commercially. The high- capacity, panchromatic imaging system features half-meter resolution imagery. Operating at an altitude of 496 km, WorldView-1 has an average revisit time of 1.7 days and is capable of collecting over one million sq km per day of half-meter imagery. The satellite is also equipped with state-of-the-art geolocation accuracy capabilities and exhibits stunning agility with rapid targeting and efficient in-track stereo collection.

WorldView-1 | Dallas, Texas

Features

- Highest-resolution imagery available
- Industry-leading geolocation accuracy
  - Ultra-stable platform, high-precision attitude sensors and GPS
- Highest capacity over a broad range of collection types (wider than any competitor)
- Bi-directional scanning
- Rapid retargeting using Control Moment Gyros (>2x faster than any competitor)
- Direct downlink to customer sites available
- World-class telescope
  - High contrast (MTF) and signal-to-noise ratio
  - Selectable Time Delay Integration (TDI) levels
- Frequent revisits at high resolution

Benefits

- Provides highly detailed imagery for precise map creation, change detection and in-depth image analysis
- Geolocate features to less than 5 m to create maps in remote areas, maximizing the utility of available resources
- Collects, stores, and downlinks a greater supply of frequently updated global imagery products than competitive systems
- Stereoscopic collection on a single pass, ensures image continuity and consistency of quality
- Extends the range of suitable imaging collection targets and enhances image interpretability

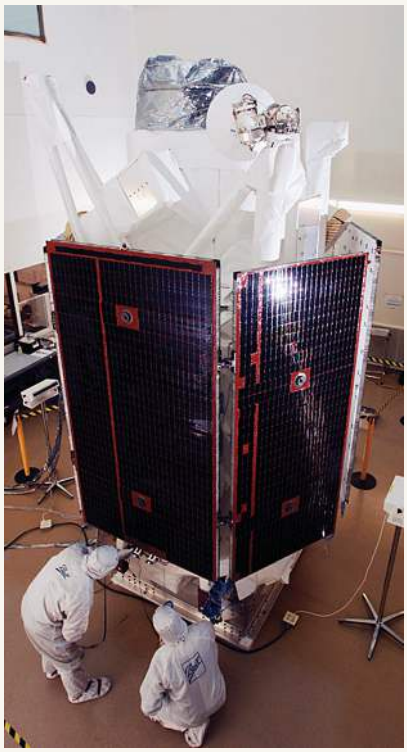

WorldView-1 clean room pre-launch preparations

Specifications

Launch information	Date: 09/18/2007 Launch vehicle: Delta 7920 (9 strap-ons) Launch site: Vandenberg Air Force Base, California
Orbit	Altitude: 496 km Type: Sun-synchronous Period: 95 min
Spacecraft size, mass, and power	3.6 m (12 ft.) tallx2.5 m (8 ft.) across 7.1 m (23 ft.) across the deployed solar arrays 2290 kg (5038 lbs.) 3.2 kW solar array, 100 Ahr battery
Sensor bands	Panchromatic: 400-900 nm
Sensor resolution	50 cm Ground Sample Distance (GSD) at nadir 55 cm GSD at 20 degrees off-nadir
Dynamic range	11-bits per pixel
Swath width	17.7 km at nadir
Attitude determination and control	3-axis stabilized Actuators: Control Moment Gyros (CMGs) Sensors: star trackers, solid state IRU, GPS
Pointing accuracy and knowledge	Accuracy: <500 m at image start and stop Knowledge: supports geolocation accuracy below
Retargeting agility	Time to slew 200 km: 10 sec
Onboard storage	2199 GB solid state with EDAC
Communications	Image and ancillary data: 800 mbps X-band Housekeeping: 4, 16, or 32 kbps real-time, 524 kbps stored, X-band Command: 2 or 64 kbps S-band
Max Contiguous Area Collected in a Single Pass (30 degrees off-nadir angle)	Mono: 111×112 km (6 strips) Stereo: 51×112 km (3 pairs)
Revisit frequency (at 40 degrees North latitude)	1.7 days at 1 m GSD or less 5.4 days at 20 degrees off-nadir or less (0.55 m GSD)
Geolocation accuracy (CE90)	Demonstrated <4.0 m CE90 without ground control
Capacity	1.3 million sq km per day

Altitude and slew time

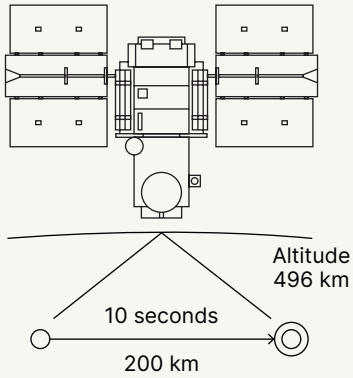

Collection scenarios

(30 degrees off-nadir angle)

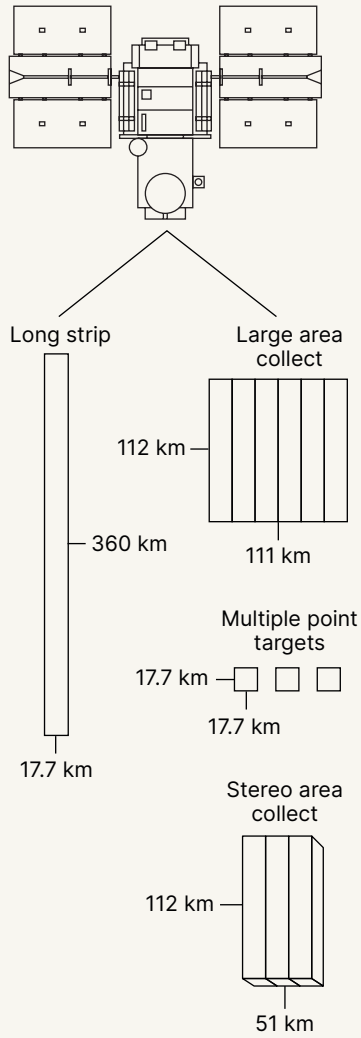

Sensor band

Panchromatic

VTR-DS-WORLDVIEW-1 10/25
©2025 Vantor. Vantor and WorldView are trademarks of Vantor Holdings, Inc. and its subsidiaries.